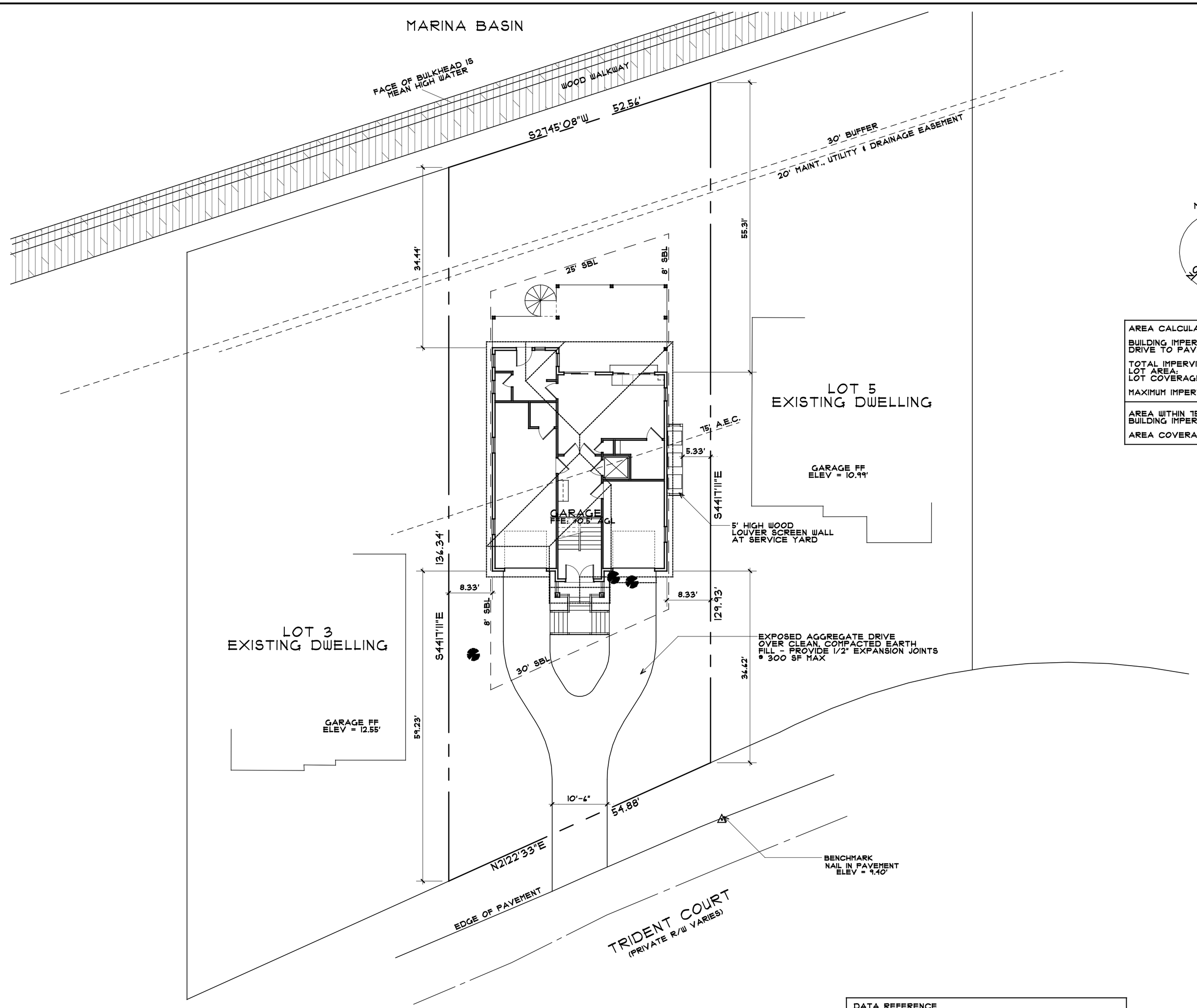

1
CD1

SITE DEVELOPMENT PLAN

1"=10'

MAGNETIC

NORTH

AREA CALCULATIONS	
BUILDING IMPERVIOUS:	1468.9 SF
DRIVE TO PAVEMENT:	866.3 SF
TOTAL IMPERVIOUS:	2335.2 SF
LOT AREA:	6656 SF
LOT COVERAGE:	35.08 %
MAXIMUM IMPERVIOUS:	2400 SF
AREA WITHIN 75' AEC LINE:	3333.1 SF
BUILDING IMPERVIOUS:	804.0 SF
AREA COVERAGE:	24.12 %

DATA REFERENCE

SURVEY BY MARK A. STOCKS, PLS DATED 05 MAY 16 FOR LOT 4, TRIDENT COURT, MARINA VILLAGE, PUD M, PARCEL B., ST. JAMES, LOCKWOOD FOLLY TWP., BRUNSWICK COUNTY, NC.
THE PROPERTY IS LOCATED IN AN "AE-11" FLOOD ZONE.

REVISIONS	BY

CIMA DESIGN, INC.
RESIDENTIAL BUILDING DESIGN
1117 WALL STREET, SUITE 1
WILMINGTON, NC 28403
TEL: (910) 452-2412 FAX: (910) 371-1194
EMAIL: CIMA@CIMA-DESIGN.COM
WWW.CIMA-DESIGN.COM

N·C·B·D·C
NATIONAL COUNCIL OF BUILDING DESIGNER CERTIFICATIONS
WORLD HEADQUARTERS
CHRISTOPHER M. PIERCE
CERTIFICATION NO. 94-151

© COPYRIGHT 2015
THIS DRAWING AND THE DESIGN SHOWN ARE THE PROPERTY OF CIMA DESIGN, INC. AND ARE NOT TO BE COPIED OR REPRODUCED WITHOUT THE PERMISSION OF THE DESIGNER. THIS DRAWING MAY ONLY BE USED FOR THE PROJECT AND SITE NOTED.

DRAWN	CP
DATE	06 DEC 16
SCALE	AS NOTED
JOB NO.	16-122
SHEET	CD1

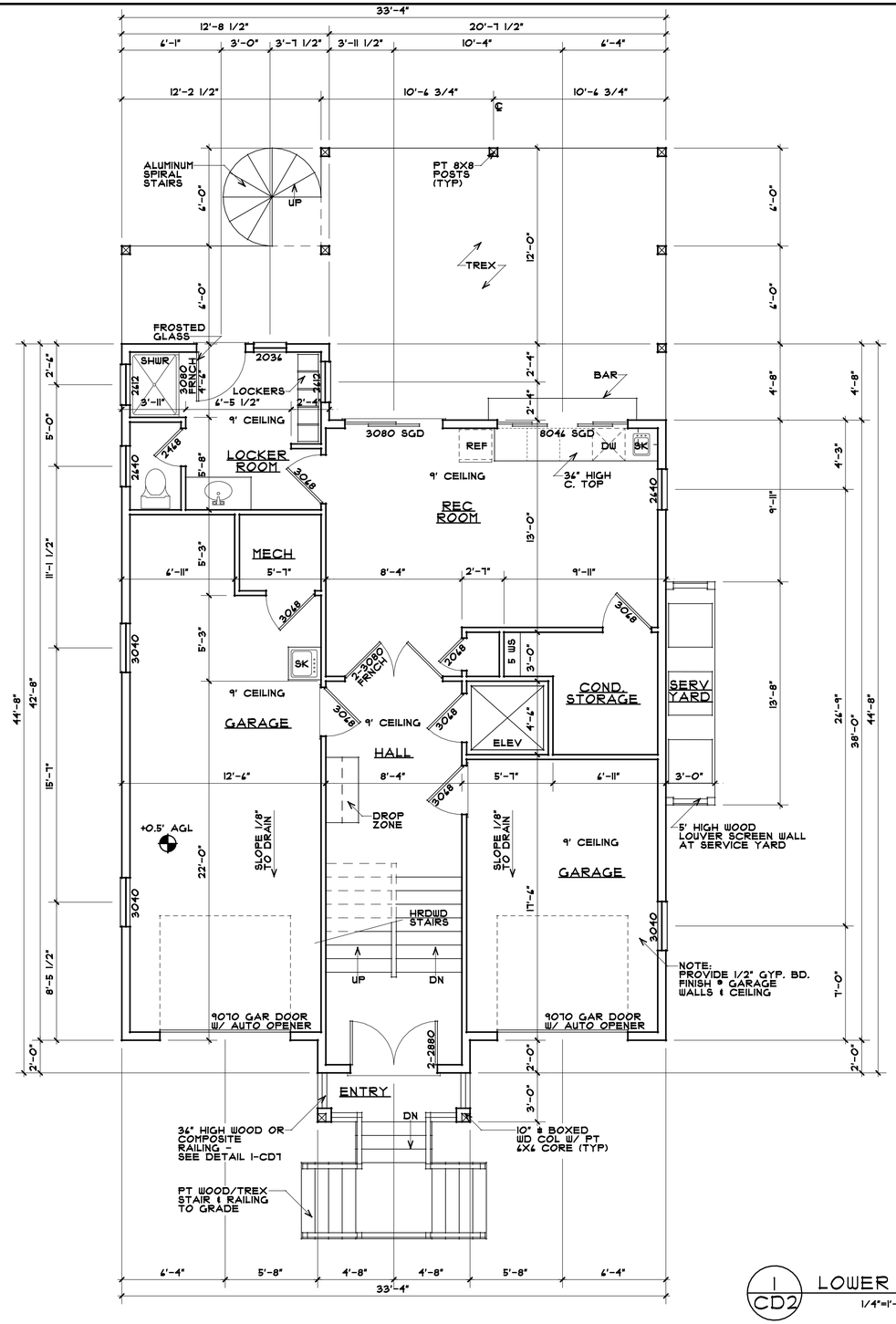

1 CD2 LOWER LEVEL PLAN

1/4"=1'-0"

GENERAL NOTES:

1. ALL EXTERIOR DIMENSIONS ARE FROM FACE OF SHEATHING TO FACE OF SHEATHING.
2. ALL INTERIOR DIMENSIONS ARE FROM FACE OF STUD TO FACE OF STUD UNLESS NOTED OTHERWISE.
3. ALL INT. WALLS ARE 2"X4" STUDS @ 16" O.C. (3 1/2") UNLESS NOTED OTHERWISE.
4. ALL EXT. WALLS ARE 2"X6" STUDS @ 16" O.C. W/ 1/2" SHEATHING (6") UNLESS NOTED OTHERWISE.
5. FOR ALL CASED OPENINGS, SET HEADER @ 8'-0" AFF.
6. ALL INTERIOR CEILINGS ARE SMOOTH GYP. BOARD FINISH UNLESS NOTED OTHERWISE.
7. DOOR, WINDOW & CASED OPENING SIZES:
   3056 = 3'-0" WIDE X 5'-6" TALL
   100 80 = 10'-0" WIDE X 8'-0" TALL
8. PLANS ARE DESIGNED TO MEET THE REQUIREMENTS OF THE NC RESIDENTIAL CODE 2012.

ELEVATOR NOTE:

PROVIDE FRAMING, DIMENSIONAL AND ELECTRICAL REQUIREMENTS PER MANUFACTURER RECOMMENDATIONS

REVISIONS	BY

CIMA DESIGN, INC.
RESIDENTIAL BUILDING DESIGN
PO BOX 1117 SUGAR GROVE, NC 28679
TEL: 910.495.2412 FAX: 828.757.1194
EMAIL: CIMA@SKYBEST.COM
WWW.CIMA-DESIGN.COM

N·C·B·D·C NATIONAL COUNCIL OF BUILDING DESIGNER CERTIFICATIONS
CERTIFIED BUILDING DESIGNER
CERTIFICATION NO. 94-181

© COPYRIGHT 2014
THIS DRAWING AND THE DESIGN IDEAS HEREIN ARE THE PROPERTY OF CIMA DESIGN, INC. AND ARE NOT TO BE COPIED OR REPRODUCED WITHOUT THE PERMISSION OF THE DESIGNER. THIS DRAWING IS ONLY TO BE USED FOR THE PROJECT AND SITE NOTED.

DRAWN	CP
DATE	06 DEC 16
SCALE	AS NOTED
JOB NO.	16-122
SHEET	CD2

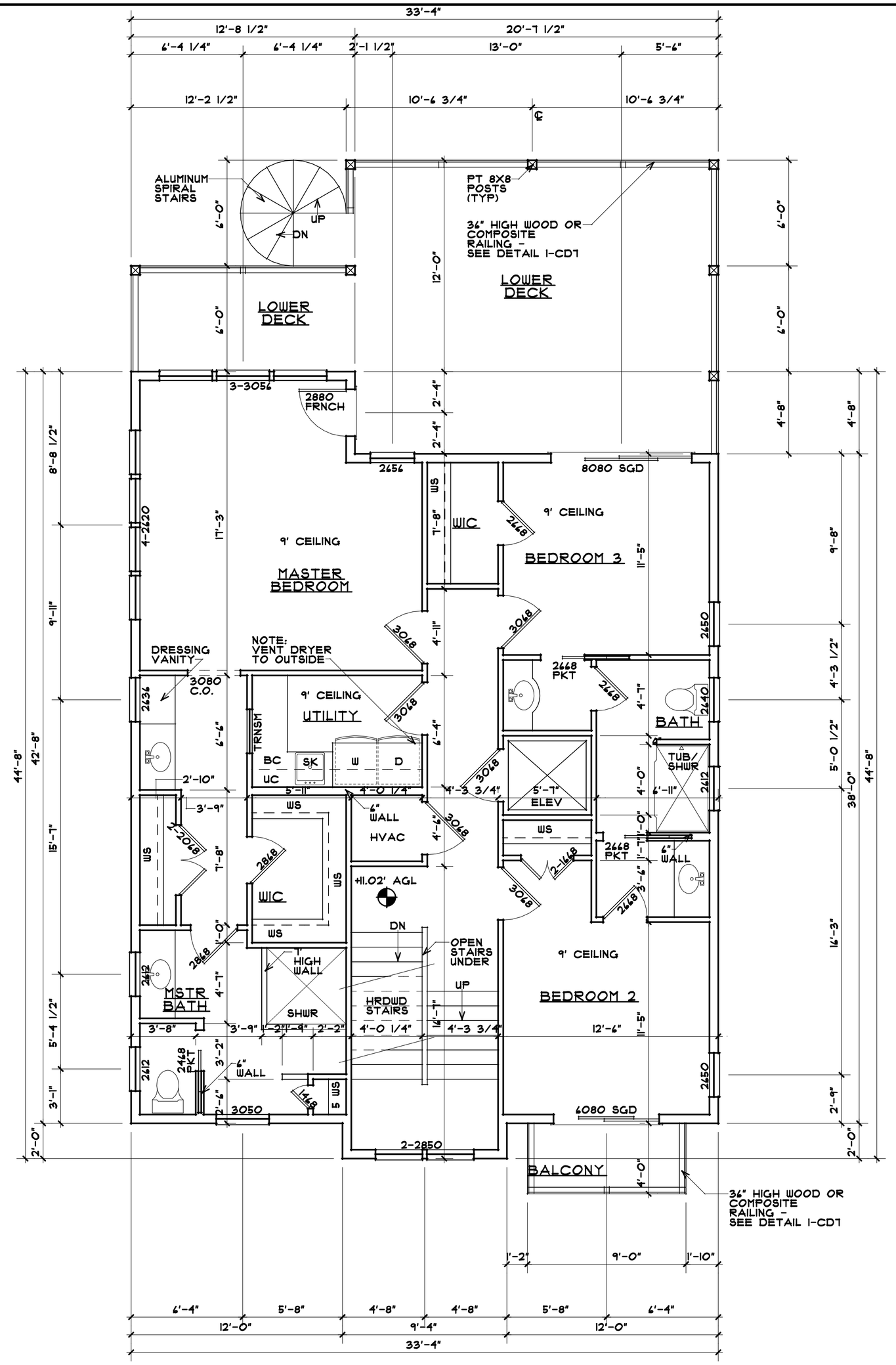

1 CD3 MAIN LEVEL PLAN

1/4"=1'-0"

GENERAL NOTES:

1. ALL EXTERIOR DIMENSIONS ARE FROM FACE OF SHEATHING TO FACE OF SHEATHING.
2. ALL INTERIOR DIMENSIONS ARE FROM FACE OF STUD TO FACE OF STUD UNLESS NOTED OTHERWISE.
3. ALL INT. WALLS ARE 2"X4" STUDS @ 16" O.C. (3 1/2") UNLESS NOTED OTHERWISE.
4. ALL EXT. WALLS ARE 2"X6" STUDS @ 16" O.C. W/ 1/2" SHEATHING (6") UNLESS NOTED OTHERWISE.
5. FOR ALL CASED OPENINGS, SET HEADER @ 8'-0" AFF.
6. ALL INTERIOR CEILINGS ARE SMOOTH GYP. BOARD FINISH UNLESS NOTED OTHERWISE.
7. DOOR, WINDOW & CASED OPENING SIZES:
   3056 = 3'-0" WIDE X 5'-6" TALL
   100 80 = 10'-0" WIDE X 8'-0" TALL
8. PLANS ARE DESIGNED TO MEET THE REQUIREMENTS OF THE NC RESIDENTIAL CODE 2012.

ELEVATOR NOTE:

PROVIDE FRAMING, DIMENSIONAL AND ELECTRICAL REQUIREMENTS PER MANUFACTURER RECOMMENDATIONS

AREA CALCULATIONS

MAIN LEVEL HTD:	1345 SF
UPPER LEVEL HTD:	1275 SF
LOWER LEVEL HTD:	742 SF
TOTAL HEATED:	3362 SF
GARAGE:	603 SF
ENTRY:	28 SF
LOWER DECKS:	423 SF
BALCONY (MAIN):	36 SF
UPPER DECKS:	423 SF
BALCONY (UPPER):	36 SF
SERVICE YARD:	41 SF
TOTAL AREA:	4952 SF

REVISIONS	BY

CIMA DESIGN, INC.
RESIDENTIAL BUILDING DESIGN
PO BOX 1111 SHALLOTTE, NC 28459
TEL: 910.405.2442 FAX: 910.579.1794
EMAIL: CIMA@CIMA-DESIGN.COM
WWW.CIMA-DESIGN.COM

N.C.B.D.C. NATIONAL COUNCIL OF RESIDENTIAL BUILDING DESIGNER CERTIFICATIONS, INC. 94-181

© COPYRIGHT 2014
THIS DRAWING AND THE DESIGN SHOWN ARE THE PROPERTY OF CIMA DESIGN, INC. AND ARE NOT TO BE COPIED OR REPRODUCED WITHOUT THE PERMISSION OF THE DESIGNER. THIS DRAWING IS CONSTRUCTED FOR THE PROJECT AND SITE NOTED.

DRAWN: CP
DATE: 06 DEC 16
SCALE: AS NOTED
JOB NO.: 16-122
SHEET: CD3

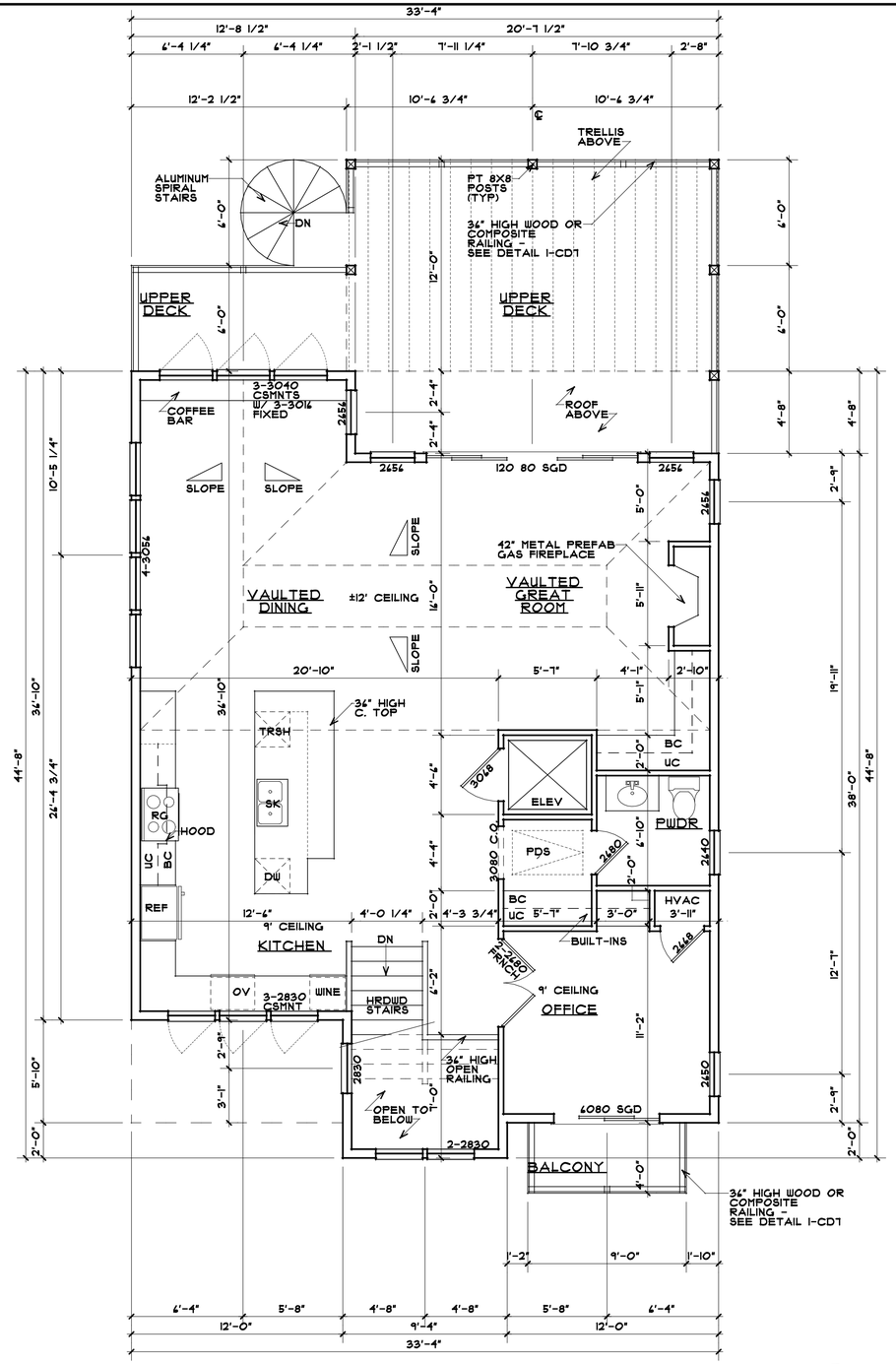

1 CD4 UPPER LEVEL PLAN

1/4"=1'-0"

GENERAL NOTES:

1. ALL EXTERIOR DIMENSIONS ARE FROM FACE OF SHEATHING TO FACE OF SHEATHING.
2. ALL INTERIOR DIMENSIONS ARE FROM FACE OF STUD TO FACE OF STUD UNLESS NOTED OTHERWISE.
3. ALL INT. WALLS ARE 2"X4" STUDS @ 16" O.C. (3 1/2") UNLESS NOTED OTHERWISE.
4. ALL EXT. WALLS ARE 2"X6" STUDS @ 16" O.C. W/ 1/2" SHEATHING (6") UNLESS NOTED OTHERWISE.
5. FOR ALL CASED OPENINGS, SET HEADER @ 8'-0" AFF.
6. ALL INTERIOR CEILINGS ARE SMOOTH GYP. BOARD FINISH UNLESS NOTED OTHERWISE.
7. DOOR, WINDOW & CASED OPENING SIZES:
   3056 = 3'-0" WIDE X 5'-6" TALL
   100 80 = 10'-0" WIDE X 8'-0" TALL
8. PLANS ARE DESIGNED TO MEET THE REQUIREMENTS OF THE NC RESIDENTIAL CODE 2012.

ELEVATOR NOTE:

PROVIDE FRAMING, DIMENSIONAL AND ELECTRICAL REQUIREMENTS PER MANUFACTURER RECOMMENDATIONS

REVISIONS	BY

CIMA DESIGN, INC.
RESIDENTIAL BUILDING DESIGN
PO BOX 1117 BUNCOMBE, NC 28533
TEL: (910) 455-2412 FAX: 455-7179
EMAIL: CIMA@WILMNET.COM
WWW.CIMA-DESIGN.COM

N·C·B·D·C
NATIONAL COUNCIL OF BUILDING DESIGNER COMMISSIONERS
MEMBER VOLUNTARY CERTIFICATION NO. 94-151

© COPYRIGHT 2014
THE DESIGNS SHOWN AND THE IDEAS AND DESIGNS HERE IN ARE THE PROPERTY OF CIMA DESIGN, INC. AND ARE NOT TO BE COPIED OR REPRODUCED WITHOUT THE PERMISSION OF THE DESIGNER. THE DRAWING IS SIGNED FOR USE ON THE PROJECT AND SITE NOTED.

DRAWN	CP
DATE	04 DEC 14
SCALE	AS NOTED
JOB NO.	14-122
SHEET	CD4

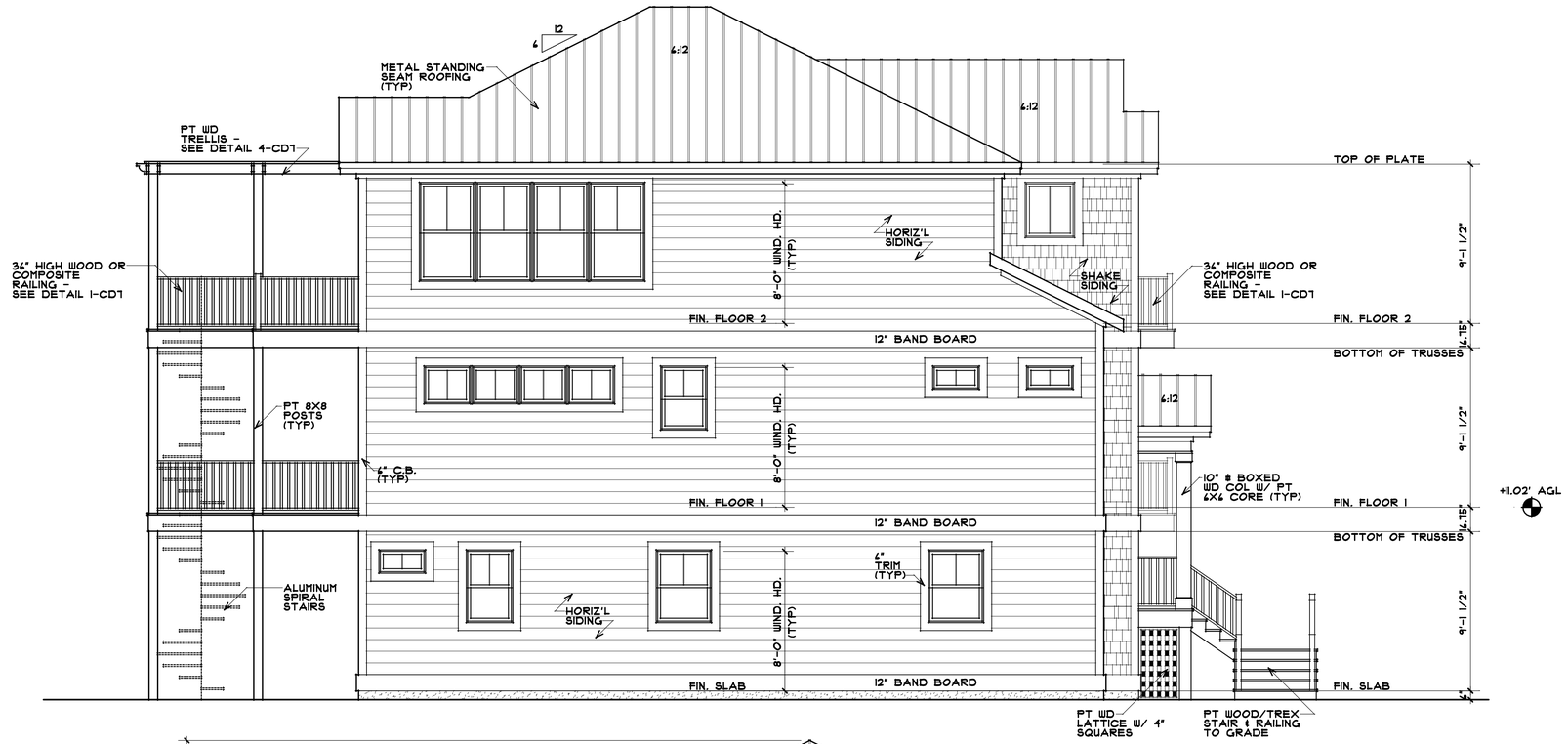

1 CD5 LEFT SIDE (NE)

1/4"=1'-0"

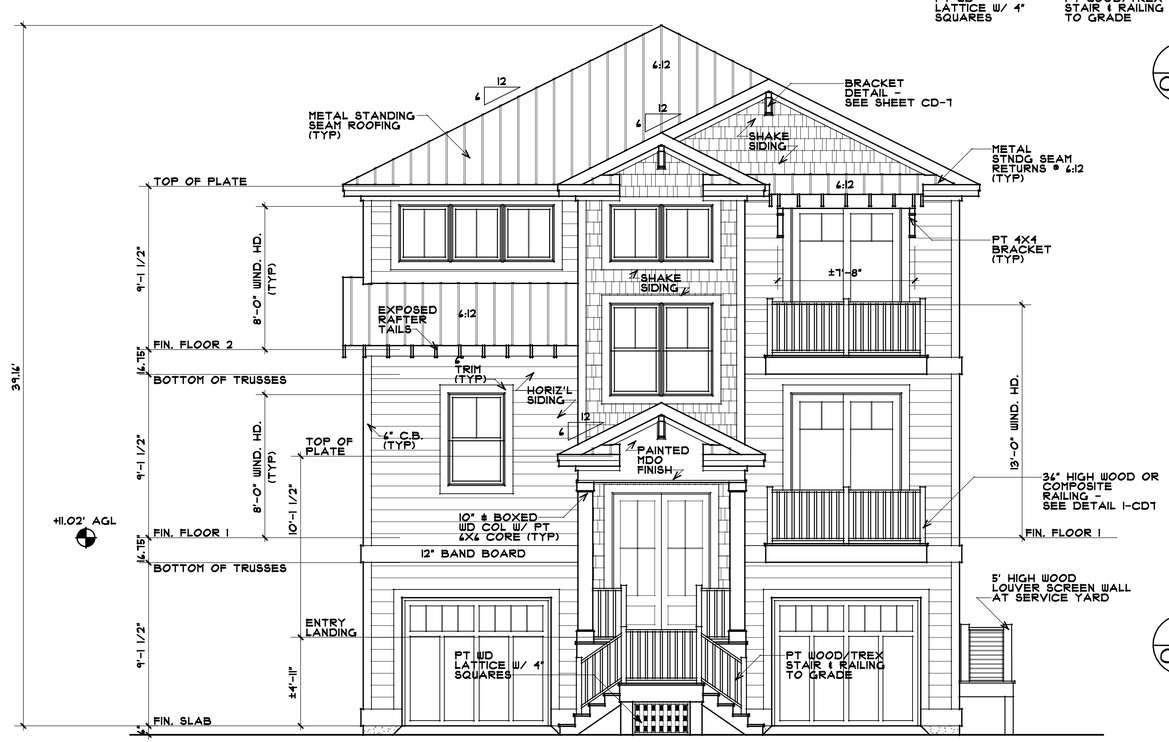

2 CD5 FRONT ELEVATION (NW)

1/4"=1'-0"

REVISIONS	BY

CIMA DESIGN, INC.
RESIDENTIAL BUILDING DESIGN
CHRIS MARTIN - SUSAN CIMA
TEL. : 410.405.2412 FAX : 410.771.7194
EMAIL : CIMA@CIMA-DESIGN.COM
WWW.CIMA-DESIGN.COM

N·C·B·D·C NATIONAL COUNCIL OF BUILDING DESIGNER CERTIFICATIONS
HOLLY VOLLMER
CERTIFIED BUILDING DESIGNER
CERTIFICATION NO. 94-181

© COPYRIGHT 2014
THIS DRAWING AND THE DESIGN SHOWN ARE THE PROPERTY OF CIMA DESIGN, INC. AND ARE NOT TO BE COPIED OR REPRODUCED WITHOUT THE PERMISSION OF THE DESIGNER. THIS DRAWING IS LOANED TO THE OWNER FOR THE PROJECT AND SITE NOTED.

DRAWN: CP
DATE: 06 DEC 16
SCALE: AS NOTED
JOB NO.: 16-122
SHEET: CD5

1 CD6 RIGHT SIDE (SW)

1/4"=1'-0"

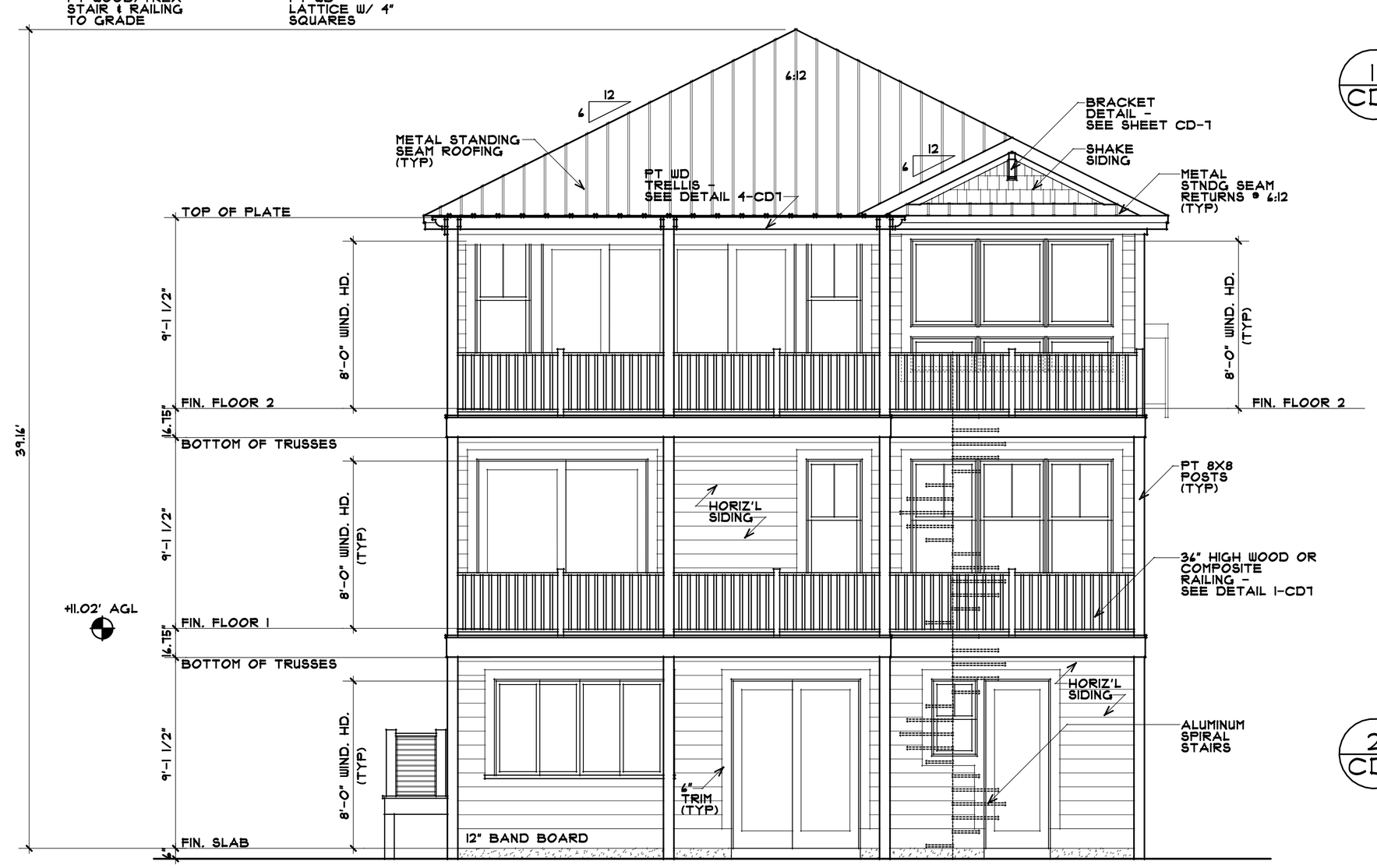

2 CD6 REAR ELEVATION (SE)

1/4"=1'-0"

REVISIONS	BY

CIMA DESIGN, INC.
RESIDENTIAL BUILDING DESIGN
PO BOX 1117 SUMMERVILLE, SC 29484
TEL: (843) 402-2412 FAX: (843) 771-7194
EMAIL: CIMADESIGN@GMAIL.COM
WWW.CIMA-DESIGN.COM

N·C·B·D·C NATIONAL COUNCIL OF BUILDING DESIGN CERTIFICATION
CERTIFICATE NO. 94-151

© COPYRIGHT 2014
THIS DRAWING AND THE DESIGNS SHOWN ARE THE PROPERTY OF CIMA DESIGN, INC. AND MAY NOT BE COPIED OR REPRODUCED WITHOUT THE PERMISSION OF THE DESIGNER. THIS DRAWING IS FOR USE ONLY ON THE PROJECT AND SITE NOTED.

DRAWN	CP
DATE	06 DEC 16
SCALE	AS NOTED
JOB NO.	16-122
SHEET	CD6

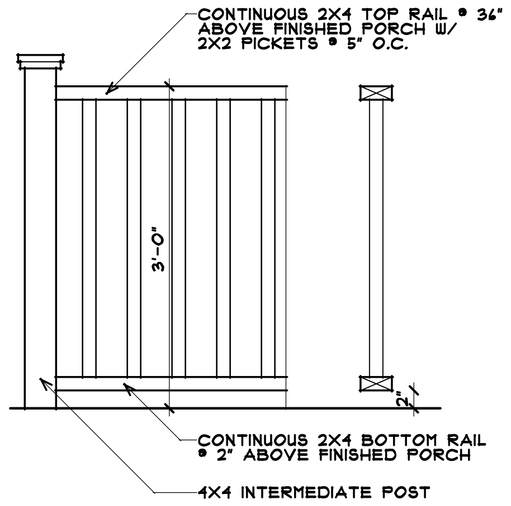

1 / CD1 EXTERIOR RAILING
1"=1'-0"

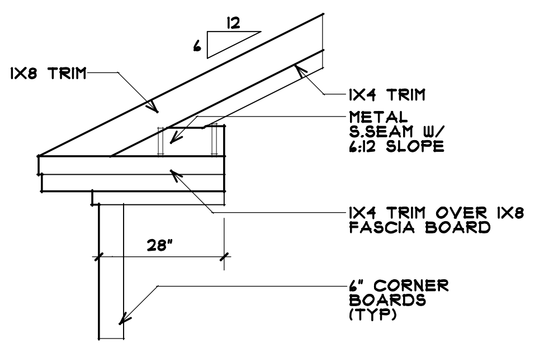

2 / CD1 RETURN DETAIL
1/2"=1'-0"

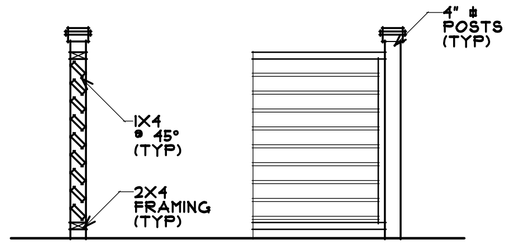

3 / CD1 HVAC WALL DETAIL
1/2"=1'-0"

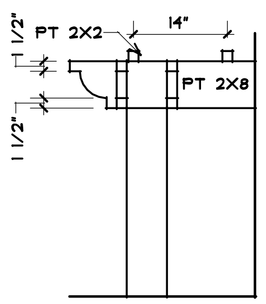

4 / CD1 TRELLIS DETAIL
3/4"=1'-0"

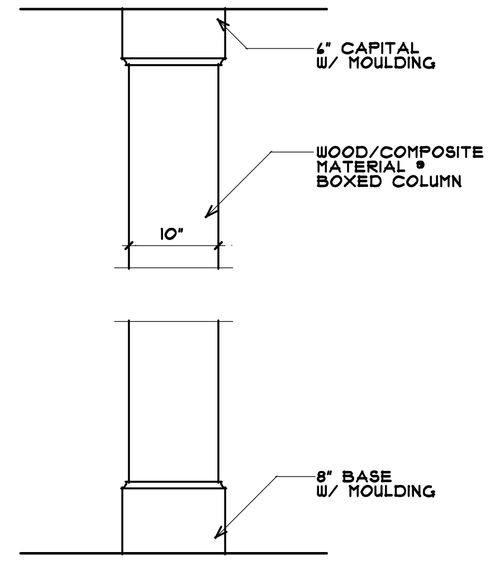

5 / CD1 COLUMN DETAIL
1"=1'-0"

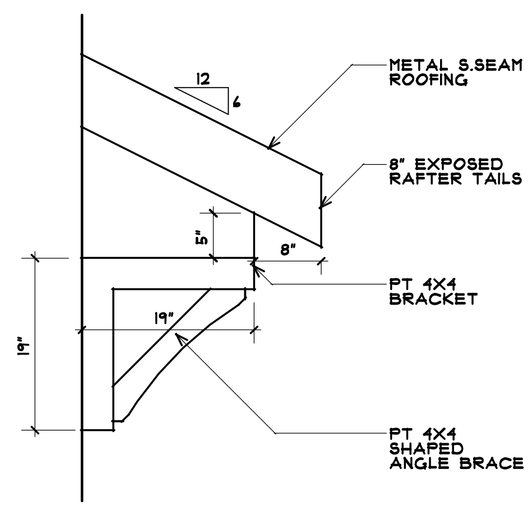

6 / CD1 BRACKET DETAIL
1"=1'-0"

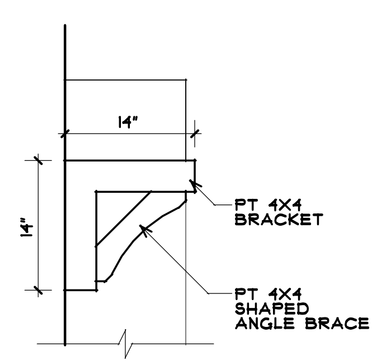

7 / CD1 GABLE BRACKET DETAIL
1"=1'-0"

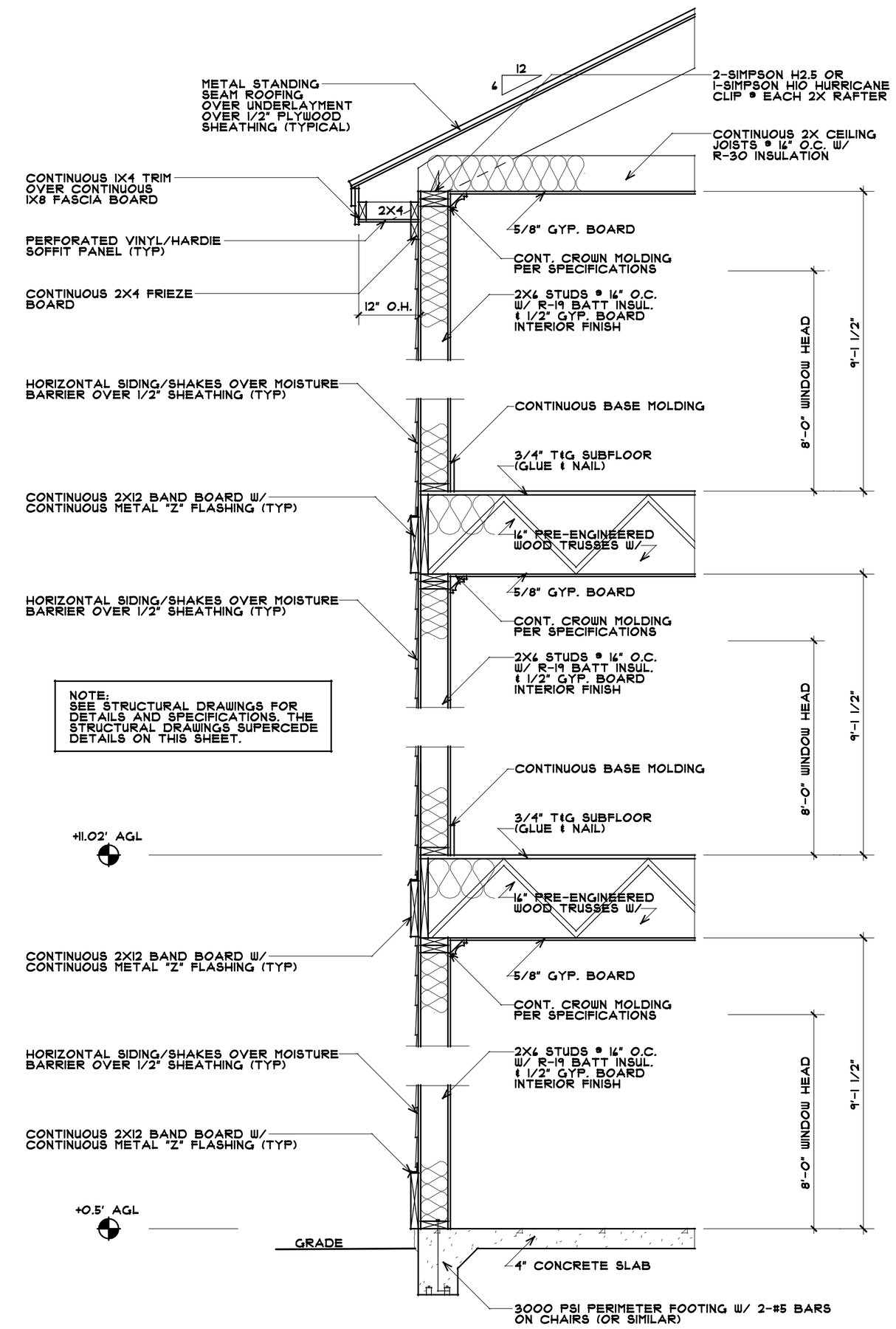

NOTE:
SEE STRUCTURAL DRAWINGS FOR DETAILS AND SPECIFICATIONS. THE STRUCTURAL DRAWINGS SUPERCEDE DETAILS ON THIS SHEET.

8 / CD1 WALL SECTION
3/4"=1'-0"

REVISIONS	BY

CIMA DESIGN, INC.
RESIDENTIAL BUILDING DESIGN
3117 MT. ZION ROAD, SUITE 203
JONESBORO, GA 30236
TEL: 770.603.2422 FAX: 86.771.7194
EMAIL: CIMA@CIMA-DESIGN.COM
WWW.CIMA-DESIGN.COM

N·C·B·D·C
NATIONAL COUNCIL OF BUILDING DESIGNER CERTIFICATIONS
NCBDC CERTIFICATION NO. 94-151
VOTED VOLUNTARILY

© COPYRIGHT 2014
THIS DRAWING AND THE DESIGNS SHOWN ARE THE PROPERTY OF CIMA DESIGN, INC. AND ARE NOT TO BE COPIED OR REPRODUCED WITHOUT THE PERMISSION OF THE DESIGNER. THIS DRAWING IS TO BE USED ONLY FOR THE PROJECT AND SITE NOTED.

DRAWN	CP
DATE	06 DEC 16
SCALE	AS NOTED
JOB NO.	16-122
SHEET	CD1

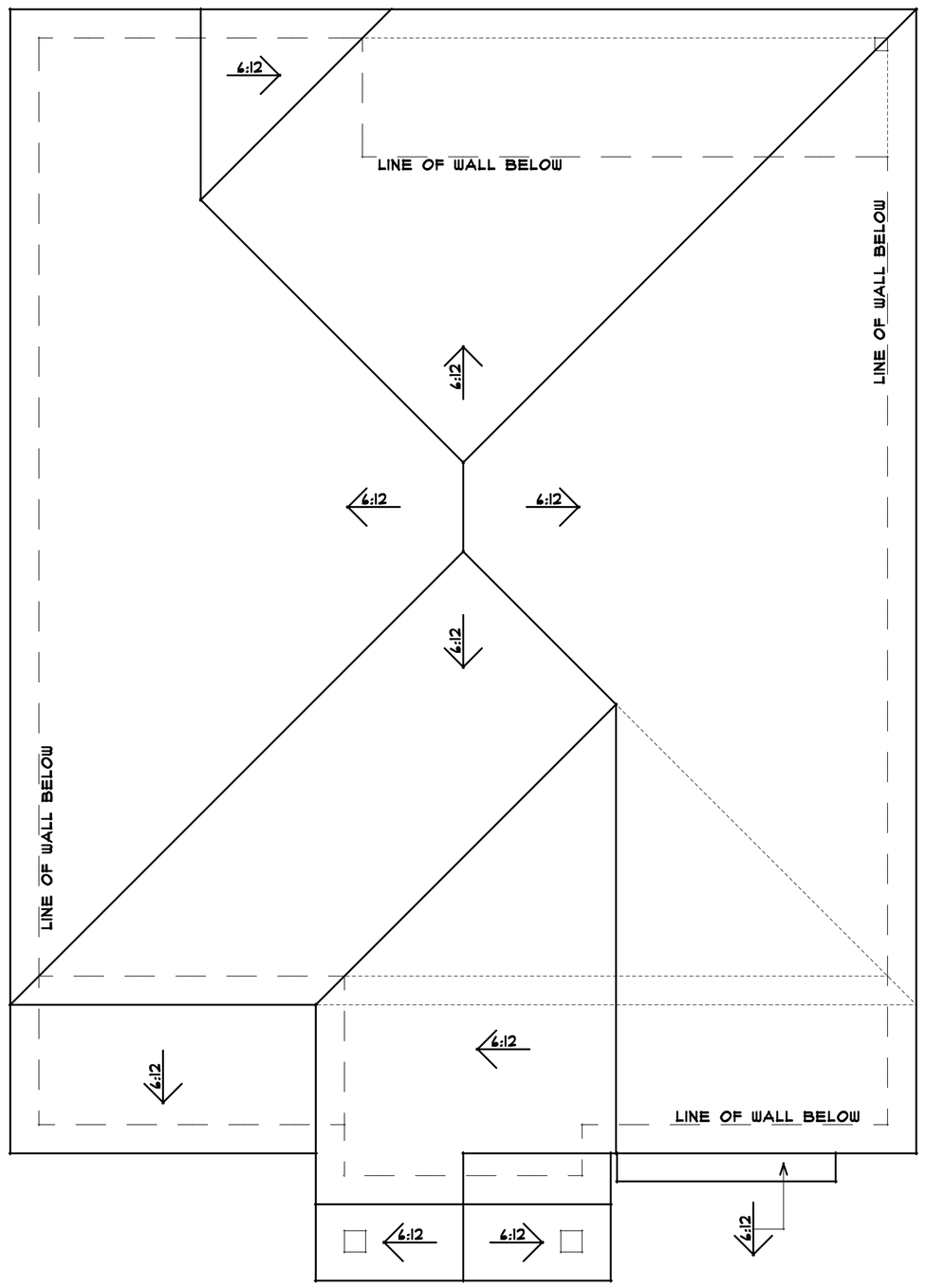

1 CD8 ROOF PLAN
1/4"=1'-0"

NOTE:
SEE STRUCTURAL DRAWINGS FOR ROOF FRAMING SPECIFICATIONS AND NOTATIONS

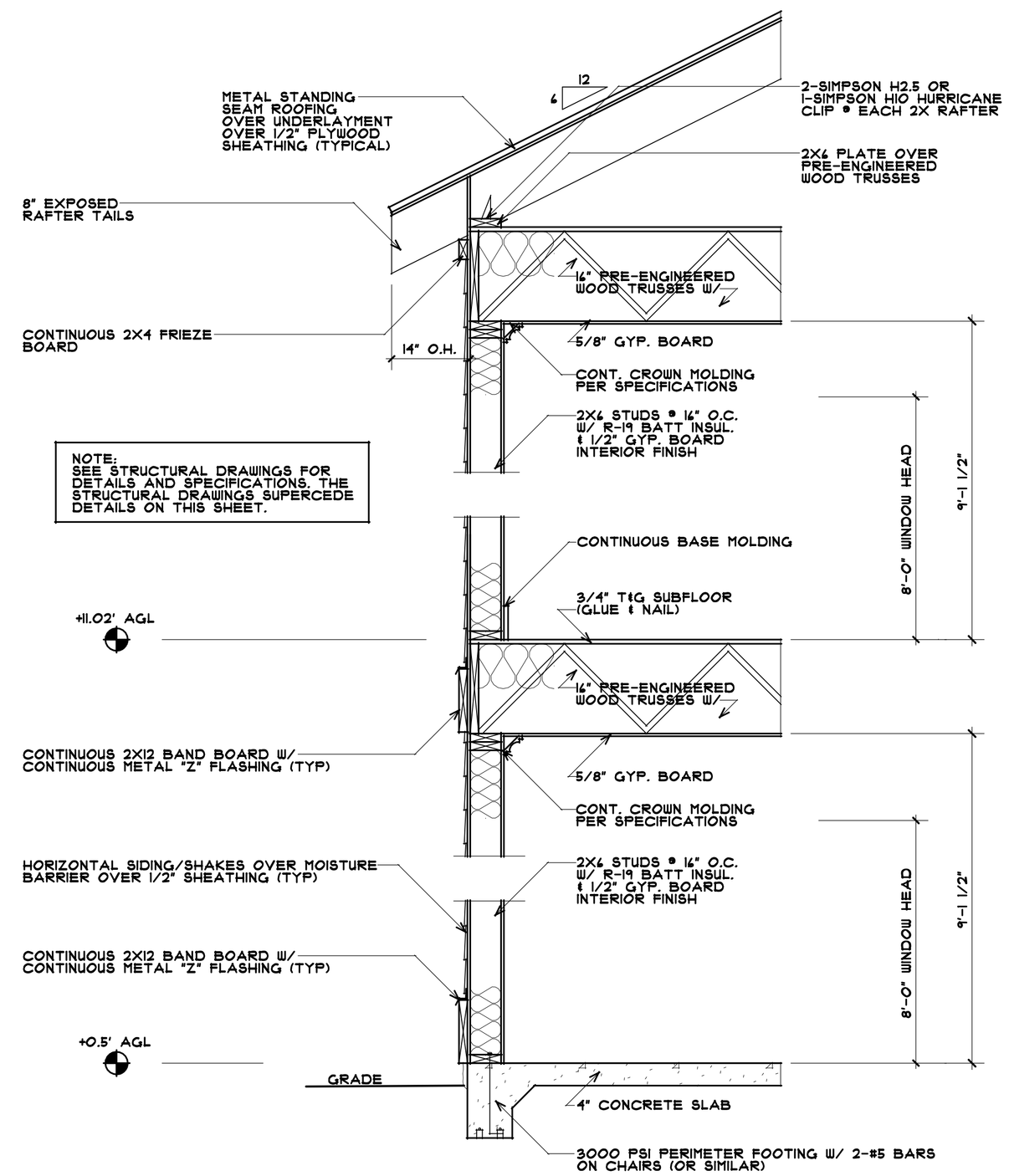

NOTE:
SEE STRUCTURAL DRAWINGS FOR DETAILS AND SPECIFICATIONS. THE STRUCTURAL DRAWINGS SUPERCEDE DETAILS ON THIS SHEET.

2 CD8 WALL SECTION (MASTER BATH)
3/4"=1'-0"

REVISIONS	BY

CIMA DESIGN, INC.
RESIDENTIAL BUILDING DESIGN
4747 NORTH 22nd STREET, SUITE 320
PHOENIX, AZ 85016
TEL : 602.405.2422
FAX : 602.337.7794
EMAIL: CIMA@CIMA-DESIGN.COM
WWW.CIMA-DESIGN.COM

N·C·B·D·C
NATIONAL COUNCIL OF MODEL BUILDING OFFICIALS
CERTIFICATION NO. 94-151

© COPYRIGHT 2014
THIS DRAWING AND THE DESIGN SHOWN ARE THE PROPERTY OF CIMA DESIGN, INC. AND ARE NOT TO BE COPIED OR REPRODUCED WITHOUT THE PERMISSION OF THE DESIGNER. THIS DRAWING IS ONLY VALID FOR USE ON THE PROJECT AND SITE NOTED.

DRAWN	CP
DATE	06 DEC 16
SCALE	AS NOTED
JOB NO.	16-122
SHEET	CD8